UCAN FASTENING PRODUCTS
155 Champagne Drive, Unit 10
Toronto, ON M3J 2C6 Canada
416-631-9400
www.ucanfast.com

UCAN® TZ WEDGE ANCHORS IN CONCRETE

CSI Sections:
03 15 19 Cast-in Concrete Anchors
05 05 19 Post-Installed Concrete Anchors

1.0 RECOGNITION

UCAN Fastening Products' TZ Wedge Anchors recognized in this report have been evaluated for use as torque-controlled, mechanical expansion anchors. The structural performance properties of the UCAN TZ Wedge Anchors comply with the intent of the provisions of the following codes and regulations:

- 2012, 2009, and 2006 International Building Code® (IBC)
- 2012, 2009, and 2006 International Residential Code® (IRC)

2.0 LIMITATIONS

Use of the UCAN TZ Wedge Anchors recognized in this report is subject to the following limitations:

2.1 The anchors shall be installed in accordance with the IBC or IRC, this report, and the manufacturer's published installation instructions. Where conflicts occur, the more restrictive governs.

2.2 The anchor sizes, dimensions, minimum embedment depths shall be as set forth in this report.

2.3 The anchors shall be installed in the top side of cracked and uncracked normal weight or sand-lightweight concrete having a specified compressive strength, f'_c, of between 2,500 psi (17.2 MPa) and 8,500 psi (58.6 MPa).

2.4 For calculation purposes, the compressive strength value, f'_c, shall not exceed 8,000 psi (55.2 MPa).

2.5 Strength design values shall be determined in accordance with Section 3.2.1 of this report. Loads applied to the anchors shall be adjusted in accordance with Section 1605.2 of the IBC for strength design.

2.6 Allowable stress design values shall be determined in accordance with Section 3.2.2 of this report. Loads applied to the anchors shall be adjusted in accordance with Section 1605.3 of the IBC.

2.7 Anchor spacing, edge distance, and minimum concrete member thickness shall comply with Table 1 of this report.

2.8 Prior to installation, calculations and design details that demonstrate compliance to this report shall be submitted to the code official. The calculations and design details shall be prepared by a licensed design professional where required by the laws and statutes of the jurisdiction in which the construction is to occur.

2.9 Since suitable criteria for evaluating performance is not available, the use of the subject anchors for fatigue or shock loading conditions is beyond the scope of this report.

2.10 Use of zinc-plated carbon steel anchor is limited to dry, interior locations.

2.11 Periodic special inspection shall be provided in accordance with Section 3.4 of this report.

2.12 Where not otherwise prohibited in the applicable code, anchors permitted for use with fire-resistance-rated construction provided at least one of the following conditions is satisfied:

- Anchors are used to resist wind or seismic forces only.
- Anchors that support fire-resistance-rated construction or gravity load-bearing structural elements are within a fire-resistance-rated envelope or a fire-resistance membrane, are protected by approved fire-resistance-rated materials, or have been evaluated for resistance to fire exposure in accordance with recognized standards.
- Anchors are used to support nonstructural elements.

2.13 Anchors are manufactured under an approved quality control program with inspections under the supervision of IAPMO UES.

2.14 The UCAN Wedge Anchors recognized in this report are produced in China at one of two plants: Plant #66 in sizes 3/8 inch (9.5 mm), 1/2 inch (12.7 mm), 5/8 inch (15.9 mm), and 3/4 inch (19.1 mm) or Plant #89 in sizes 3/8 inch (9.5 mm), 1/2 inch (12.7 mm), and 5/8 inch (15.9 mm)

3.0 PRODUCT USE

3.1 General: The UCAN TZ Wedge Anchor torque-controlled mechanical expansion anchors are used to resist static, wind and seismic (Seismic Design Categories A through F under the IBC) tension and shear loads in cracked and uncracked normal weight concrete that has a specified compressive strength, f'_c, of between 2,500 psi (17.2 MPa)

The product described in this Uniform Evaluation Service (UES) Report has been evaluated as an alternative material, design or method of construction in order to satisfy and comply with the intent of the provision of the code, as noted in this report, and for at least equivalence to that prescribed in the code in quality, strength, effectiveness, fire resistance, durability and safety, as applicable, in accordance with IBC Section 104.11. This document shall only be reproduced in its entirety.

Copyright © 2023 by International Association of Plumbing and Mechanical Officials. All rights reserved. Printed in the United States. Ph: 1-877-4IESRPT • Fax: 909.472.4171 web: www.uniform-es.org • 4755 East Philadelphia Street, Ontario, California 91761-2816 – USA

and 8,500 psi (58.6 MPa). Cracked concrete shall be assumed except for anchors located a region of the concrete member where analysis indicates no cracking (uncracked) at service loads or restrained shrinkage in accordance with ACI 318, D.5.2.6 and D.6.2.7. Cracked concrete also shall be assumed for anchors in structures assigned to Seismic Design Category C, D, E, or F. The anchors comply with Section 1909 of the 2012 IBC and Section 1912 of the 2009 and 2006 IBC. The anchors are alternatives to cast-in-place anchors described in Section 1908 of the 2012 IBC and Section 1911 of the 2009 and 2006 IBC. The anchors may be used where an engineered design is submitted in accordance with Section R301.1.3 of the IRC.

Installation instructions and information are set forth in Section 3.3, Tables 1 and 5, and Figures 1, 2, and 3 of this report.

3.2 Design:

3.2.1 Strength Design

3.2.1.1 General: Design strength of anchors complying with the 2012 IBC, or with Section R301.1.3 of the 2012 IRC, shall be determined in accordance with ACI 318-11 Appendix D and this report.

Design strength of anchors complying with the 2009 IBC, or with Section R301.1.3 of the 2009 IRC, shall be determined in accordance with ACI 318-08 and this report.

Design strength of anchors complying with the 2006 IBC, or with Section R301.1.3 of the 2006 IRC, shall be determined in accordance with ACI 318-05 and this report.

The strength design of anchors shall comply with ACI 318 D.4.1, except as required in ACI 318 D.3.3. Strength reduction factors, ϕ, as given in ACI 318-11 D.4.3 (D.4.4 in ACI 318-08 and ACI 318-05) and noted in Tables 2 and 3 of this report, shall be used for load combinations calculated in accordance with Section 1605.2 of the IBC and ACI 318 Section 9.2. Anchor designs shall satisfy the requirements of ACI 318 Section D.4.1. Under the 2012 IBC and IRC, anchor group effects shall be considered in accordance with ACI 318-11 Section D.3.1.1. Strength reduction factors, ϕ, described in ACI 318-11 D.4.4 (D.4.5 in ACI 318-08 and ACI 318-05) shall be used for load combinations calculated in accordance with ACI 318 Appendix C.

3.2.1.2 Requirements for Static Steel in Tension, N_{sa}: The nominal static steel strength of a single anchor in tension, N_{sa}, calculated in accordance with ACI 318 D.5.1.2, is given in Table 2 of this report. The strength reduction factors, ϕ, corresponding to the ductility of the steel elements, are given in Table 2 of this report. Table 4 of this report provides the mean axial stiffness values, β, for each diameter in normal weight concrete.

3.2.1.3 Requirements for Static Concrete Breakout Strength in Tension, N_{cb} or N_{cbg}: The nominal concrete breakout strength of a single anchor or group of anchors in tension, N_{cb} or N_{cbg}, respectively, shall be calculated in accordance with ACI 318 D.5.2, with modifications as described herein. The basic concrete breakout strength in tension, N_{cb}, shall be calculated in accordance with ACI 318 D.5.2.2, using the values of h_{ef} and k_{cr} as listed in Table 2 of this report. The nominal concrete breakout strength in tension in regions where analysis indicates no cracking in accordance with ACI 318 D.5.2.6, shall be calculated with the value of k_{uncr} as listed in Table 2 of this report and with $\psi_{c,N}$=1.0.

For anchors installed in sand-lightweight concrete, the corresponding modification factors, λ and λ_a, shall be applied to the breakout strengths in accordance with ACI 318-11 D.3.6. Value of f'_c shall be limited to a maximum of 8,000 psi (55 MPa) in accordance with ACI 318 Section D.3.7.

3.2.1.4 Requirements for Static Pullout Strength in Tension, N_{pn}: The nominal pullout strength of a single anchor in tension in accordance with ACI 318 D.5.3 in cracked and uncracked concrete, $N_{p,cr}$ and $N_{p,uncr}$, respectively, is listed in Table 2 of this report. In lieu of ACI 318 D.5.3.6, $\psi_{c,P}$ = 1.0 for all design cases. The nominal pullout strength in cracked concrete shall be adjusted using Eq-1 of this report:

$$N_{pn,f'c} = N_{p,cr}\left(\frac{f'_c}{2{,}500}\right)^{0.5} \quad \text{(lb, psi)} \qquad \text{Eq-1}$$

$$N_{pn,f'c} = N_{p,cr}\left(\frac{f'_c}{17.2}\right)^{0.5} \quad \text{(N, MPa)}$$

where f'_c is the specified concrete compressive strength.

In regions where analysis indicates no cracking in accordance with ACI 318 D.5.3.6, the nominal pullout strength in tension shall be adjusted using Eq-2 of this report:

$$N_{pn,f'c} = N_{p,uncr}\left(\frac{f'_c}{2{,}500}\right)^{0.5} \quad \text{(lb, psi)} \qquad \text{Eq-2}$$

$$N_{pn,f'c} = N_{p,cr}\left(\frac{f'_c}{17.2}\right)^{0.5} \quad \text{(N, MPa)}$$

where f'_c is the specified concrete compressive strength.

Where values for $N_{p,cr}$ or $N_{p,uncr}$ are not listed in Table 2 of this report, the pullout strength in tension need not be evaluated.

3.2.1.5 Requirements for Static Steel Strength in Shear, V_{sa}: The nominal steel strength in shear, V_{sa}, of a single anchor in accordance with ACI 318 D.6.1.2 is given in Table 3 of this report and shall be used in lieu of the values derived by calculation from ACI 318-11, Eq. D-29 (D-20 in ACI 318-08 and ACI 318-05). The strength reduction factors, ϕ,

associated with ductile steel elements listed in Table 3 of this report shall be used.

3.2.1.6 Requirements for Static Concrete Breakout Strength in Shear, V_{cb} or V_{cbg}: The nominal concrete breakout strength of a single anchor or group of anchors in shear, V_{cb} or V_{cbg}, respectively, shall be calculated in accordance with ACI 318 D.6.2, with modifications as described herein. The basic concrete breakout strength in shear, V_b, shall be calculated in accordance with ACI 318 D.6.2.2 using the values of l_e and d_a (d_o) given in Table 3 of this report.

For anchors installed in lightweight concrete, the corresponding modification factors, λ and λ_a, shall be applied to the breakout strengths in accordance with ACI 318-11 D.3.6. Value of f'_c shall be limited to a maximum of 8,000 psi (55 MPa) in accordance with ACI 318 Section D.3.7.

3.2.1.7 Requirements for Static Concrete Pryout Strength in Shear, V_{cp} or V_{cpg}: The nominal concrete pryout strength of a single anchor or group of anchors in shear, V_{cp} or V_{cpg}, shall be calculated in accordance with ACI 318 D.6.3, modified using the value of k_{cp} provide in Table 3 of this report and the value of N_{cb} or N_{cbg} as calculated in Section 3.2.1.3 of this report.

3.2.1.8 Requirements for Seismic Design

3.2.1.8.1 General: For load combinations including seismic loads, the design calculations shall be performed in accordance with ACI 318 D.3.3. Modifications to ACI 318 D.3.3 shall be applied under Section 1908.1.9 of the 2009 IBC or Section 1908.1.16 of the 2006 IBC, as applicable. The anchors shall be designed in accordance with ACI 318-11 D.3.3.4, D.3.3.5, D.3.3.6, or D.3.3.7; ACI 318-08 D.3.3.4, D.3.3.5, or D.3.3.6; or ACI 318-05 D.3.3.4 or D.3.3.5, as applicable. Strength reduction factors, ϕ, are listed in Tables 2 and 3 of this report.

All anchors listed in this report may be installed in structures assigned to IBC Seismic Design Categories A to F.

Section 1905.1.9 of the 2012 IBC shall be replaced with the following:

1905.1.9 ACI 318 Section D.3.3: Delete ACI 318 Sections D.3.3.4.2, D3.3.4.3 (d), and D.3.3.5.2 and replace with the following:

D.3.3.4.2 - Where the tensile component of the strength-level earthquake force applied to anchors exceeds 20 percent of the total factored anchor tensile force associated with the same load combination, anchors and their attachments shall be designed in accordance with D.3.3.4.3. The anchor design tensile strength shall be determined in accordance with D.3.3.4.4.

Exception:

Anchors designed to resist wall out-of-plane forces with design strengths equal to or greater than the force determined in accordance with ASCE 7 Equation 12.11-1 or 12.14-10 shall be deemed to satisfy Section D.3.3.4.3 (d).

D.3.3.4.3 (d) – The anchor or group of anchors shall be designed for the maximum tension obtained from design load combinations that include E, with E increased by Ω_o. The anchor design tensile strength shall be calculated from D.3.3.4.4.

D.3.3.5.2 – Where the shear component of the strength-level earthquake force applied to anchors exceeds 20 percent of the total factored anchor shear force associated with the same load combination, anchors and their attachments shall be designed in accordance with D.3.3.5.3. The anchor design shear strength for resisting earthquake forces shall be determined in accordance with D.6.

3.2.1.8.2 Seismic Tension: The nominal steel strength and nominal concrete breakout strength for anchors in tension shall be calculated in accordance with ACI 318 D.5.1 and D.5.2, as described in Sections 3.2.1.2 and 3.2.1.3 of this report. In accordance with ACI 318 D.5.3.2, the appropriate value for pullout strength in tension for seismic loads, $N_{p,eq}$, as listed in Table 2 of this report, shall be used in lieu of N_p. $N_{p,eq}$ may be adjusted by calculations in accordance with Eq-3 of this report.

$$N_{p,eq,f'c} = N_{p,eq}\left(\frac{f'_c}{2{,}500}\right)^{0.5} \quad \text{(lb, psi)} \qquad \text{Eq-3}$$

$$N_{p,eq,f'c} = N_{p,eq}\left(\frac{f'_c}{17.2}\right)^{0.5} \quad \text{(N, MPa)}$$

Where values for $N_{p,eq}$ are not listed in Table 2 of this report, the pullout strength in tension is not a controlling element and need not be evaluated.

3.2.1.8.3 Seismic Shear: The nominal concrete breakout strength and concrete pryout strength for anchors in shear shall be calculated in accordance with ACI 318 D.6.2 and D.6.3, as described in Sections 3.2.1.6 and 3.2.1.7 of this report. In accordance with ACI 318 D.6.1.2, the appropriate value for nominal steel strength in shear for seismic loads, $V_{sa,eq}$, as listed in Table 3 of this report, shall be used in lieu of V_{sa}.

3.2.1.9 Requirements for Interaction of Tensile and Shear Forces: Anchors or groups of anchors that are subject to the effects of combined axial tension and shear forces shall be designed in accordance with ACI 318 D.7.

3.2.1.10 Requirements for Critical Edge Distance: In applications where the design edge distance, c, is less than

the critical edge distance, c_{ac}, and supplemental reinforcement to control splitting of the concrete is not present, the concrete breakout strength in tension for uncracked concrete, calculated according to ACI 318 D.5.2, shall be further multiplied by the factor $\psi_{cp,N}$ given by Eq-4 of this report:

$$\psi_{cp,N} = \frac{c}{c_{ac}} \qquad \textbf{Eq-4}$$

where the factor $\psi_{cp,N}$ need not be taken as less than $\frac{1.5h_{ef}}{c_{ac}}$, where c_{ac} and h_{ef} shall be as listed in Table 1 of this report. For all other cases, $\psi_{cp,N} = 1.0$.

3.2.1.11 Requirements for Minimum Member Thickness, Minimum Anchor Spacing, and Minimum Edge Distance: In lieu of ACI 318 D.8.1, D.8.3 and D.8.5, values of c_{min}, s_{min} and h_{min} shall comply with the Table 1 of this report.

3.2.1.12 Requirements for Sand-lightweight Concrete: For ACI 318-11 or 318-08, when anchors are used in sand-lightweight concrete, the modification factor λ_a or λ, respectively, shall be taken as 0.6 in lieu of ACI 318-11 D.3.6 (2012 IBC) or ACI 31808 D.3.4 (2009 IBC). In addition, the pullout strength $N_{p,uncr}$, $N_{p,cr}$ and $N_{p,eq}$ shall be multiplied by 0.6, as applicable.

For ACI 318-05, the values of N_b, $N_{p,uncr}$, $N_{p,cr}$ and $N_{p,eq}$ and V_{cb} shall be multiplied by 0.6 in lieu of ACI 318 D.3.4.

3.2.2 Allowable Stress Design

3.2.2.1 General: Design values for use with allowable stress design load combinations calculated in accordance with Section 1605.3 of the IBC, shall be established using Eq-5 and Eq-6 of this report:

$$T_{allowable,ASD} = \frac{\phi N_n}{\alpha} \qquad \textbf{Eq-5}$$

$$V_{allowable,ASD} = \frac{\phi V_n}{\alpha} \qquad \textbf{Eq-6}$$

where:

$T_{allowable,ASD}$ = Allowable tension load (lbf or kN)

$V_{allowable,ASD}$ = Allowable shear load (lbf or kN)

ϕN_n = Lowest design strength of an anchor or anchor group in tension as determined with ACI 318 Appendix D, Section 4.1 of this report, and 2009 IBC Section 1908.1.9 or 2006 IBC Section 1908.1.16, as applicable (lbf or kN)

ϕV_n = Lowest design strength of an anchor or anchor group in shear as determined with ACI 318 Appendix D, Section 4.1 of this report, and 2009 IBC Section 1908.1.9 or 2006 IBC Section 1908.1.16, as applicable (lbf or kN)

α = Conversion factor calculated as a weighted average of the load factors for the controlling load combination. In addition, α shall include all applicable factors to account for non-ductile failure modes and required over-strength.

The requirements for member thickness, edge distance and spacing, described in this report, shall apply. An example of allowable stress design values for illustrative purposes is shown in Table 6 and Figure 5 of this report.

3.2.2.2 Interaction of Tensile and Shear Forces: Anchors or groups of anchors that are subject to the effects of combined axial tension and shear forces shall be designed in accordance with ACI 318 D.7, as follows:

For tension loads, $T_{applied} \leq 0.2T_{allowable,ASD}$, the full allowable load in shear shall be permitted.

For shear loads, $V_{applied} \leq 0.2V_{allowable,ASD}$, the full allowable load in tension shall be permitted.

For all other cases, Eq-7 of this report shall be satisfied:

$$\frac{T_{applied}}{T_{allowable,ASD}} + \frac{V_{applied}}{V_{allowable,ASD}} \leq 1.2 \qquad \textbf{Eq-7}$$

3.3 Installation: Installation parameters are provided in Tables 1 and 2, and Figures 1, 2, and 3 of this report. Anchor locations shall comply with this report and the plans and specifications approved by the code official. The TZ Wedge Anchors shall be installed in accordance with the manufacturer's published installation instructions and this report. Anchors shall be installed in holes drilled into the concrete using carbide-tipped masonry drill bits that comply with ANSI B212.15-1994. The nominal drill bit diameter shall be equal to that of the anchor and listed in Table 1 of this report. The minimum drilled hole depth is listed in Table 1 of this report. Prior to anchor installation, the dust and debris resulting from drilling shall be removed from the hole using a hand pump, compressed air or a vacuum. The anchor shall be hammered into the predrilled and cleaned hole until the proper nominal embedment depth is achieved. The nut shall be tightened against the washer until the installation torque value, as listed in Table 1 of this report, is achieved.

3.4 Special Inspection: Periodic special inspection is required in accordance with Section 1705.1.1 and Table 1705.3 of the 2012 IBC, Section 1704.15 and Table 1704.4 of the 2009 IBC, or Section 1704.13 of the 2006 IBC, as applicable. The special inspector shall make periodic inspections during anchor installation to verify anchor type, anchor dimensions, concrete type, concrete compressive

strength, concrete member thickness, anchor spacing, anchor edge distance, drill bit type, drill bit size, hole dimensions, hole cleaning method, installation torque procedure and verification and adherence to the manufacturer's printed installation instructions. The special inspector shall be present as often as required in accordance with the "statement of special inspection".

4.0 PRODUCT DESCRIPTION

4.1 Product Information: The UCAN TZ Wedge Anchors are torque-controlled, mechanical expansion anchors that are comprised of four components: anchor body (stud), expansion element (clip), washer and nut. A typical anchor is depicted in Figure 1 of this report. The anchor body has a tapered mandrel formed on the bottom end of the anchor and a threaded upper end. The expansion clip is fixed to the anchor body over the tapered mandrel during fabrication and rotates freely on the anchor before installation.

The anchor is inserted into a predrilled hole in the hardened concrete using a mallet. The anchor is set by application of an installation torque to the hex nut, which serves to expand the expansion clip against the concrete side of the bore hole. Loads are transferred through the anchor to and from the concrete by friction.

The anchors are available in 3/8 inch (9.5 mm), 1/2 inch (12.7 mm), 5/8 inch (15.9 mm) and 3/4 inch (19.1 mm) diameters of various lengths. The product names and sizes are presented in Table 5 of this report.

The anchor body is manufactured from carbon steel with 5 µm of zinc plating conforming to ASTM B633. The expansion clips are fabricated from carbon steel with 5 µm zinc plating conforming to ASTM B633. The plain steel hex nuts conform to ASTM A563, Grade A, and the plain steel washers conform to ASTM F844.

4.2 Material Information: Normal weight concrete and sand-lightweight concrete shall comply with Sections 1901, 1903, and 1905 of the 2012 IBC (Section 1908 of the 2009 and 2006 IBC), as applicable.

5.0 IDENTIFICATION

UCAN TZ Wedge Anchors are identified by dimensional characteristics and packaging. The packaging label lists the name and address of UCAN Fastening Products, the manufacturing location, the anchor size and type, and the IAPMO UES evaluation report number (ER-373). The threaded end of each TZ Wedge Anchor is stamped with a length identification code letter as indicated in Table 5 of this report and shown in Figure 5 of this report.

Either IAPMO UES Mark of Conformity may also be used as shown below:

IAPMO ES ® or UES ®

IAPMO UES ER-373

6.0 SUBSTANTIATING DATA

Testing and analysis data for cracked and uncracked concrete in accordance with ICC-ES Acceptance Criteria for Mechanical Anchors in Concrete Elements (AC193), Approved June 2012, editorially revised April 2015, and ACI 355.2-07 Qualification of Post-Installed Anchors in Concrete, including testing for seismic tension and seismic shear. Test results are from laboratories accredited to ISO/IEC 17025.

7.0 STATEMENT OF RECOGNITION

This evaluation report describes the results of research completed by IAPMO Uniform Evaluation Service on UCAN Fastening Products TZ Wedge Anchors to assess conformance to the codes shown in Section 1.0 of this report and serves as documentation of the product certification. Products are manufactured at the location noted in Section 2.14 of this report under a quality control program with periodic inspections under the supervision of IAPMO UES.

For additional information about this evaluation report please visit www.uniform-es.org or email us at info@uniform-es.org

TABLE 1: UCAN TZ Wedge Anchor Installation Specifications in Concrete[1]

Property	Notation	Unit	Nominal Anchor Size						
			3/8 inch	1/2 inch		5/8 inch		3/4 inch	
Anchor diameter	d_o[2]	inch	0.375	0.500		0.625		0.750	
		mm	9.5	12.7		15.9		19.1	
Minimum diameter of hole in fixture	d_h	inch	7/16	9/16		11/16		13/16	
		mm	11.1	14.3		17.5		20.6	
Nominal drill bit diameter	d_{bit}	inch	3/8 ANSI	1/2 ANSI		5/8 ANSI		3/4 ANSI	
Nominal embedment depth	h_{nom}	inch	2 3/8	2 3/4	3 3/4	3 3/8	4 5/8	4	5 5/8
		mm	60	70	95	85	117	102	143
Effective embedment depth	h_{ef}	inch	2	2	3 1/2	2 3/4	4	3 1/4	4 3/4
		mm	51	51	89	70	102	83	121
Minimum hole depth	h_{hole}	inch	2 1/2	2 3/4	3 3/4	3 3/8	4 5/8	4	5 5/8
		mm	64	70	95	86	117	102	143
Installation torque	T_{inst}	ft·lb	20	40	40	80	80	110	110
		N·m	27	54	54	108	108	149	149
Installation Parameters in Concrete Construction									
Minimum concrete member thickness	h_{min}	inch	3 1/2	4	7	6	7	7	10
		mm	89	102	178	152	178	178	254
Minimum edge distance	c_{min}	inch	3	3	2 1/2	6	3	7	6
		mm	76	76	64	152	76	178	152
Minimum spacing distance	s_{min}	inch	4 1/2	5	3	4	5	4 1/2	3 1/2
		mm	114	127	76	102	127	114	89
Critical edge distance (uncracked concrete)	c_{ac}	inch	7	5	7	5 1/2	8	8	8 1/2
		mm	178	127	178	140	203	203	216

For **SI**: 1 inch = 25.4 mm; 1 ft·lb = 1.356 N·m
[1]The information presented in the table is to be used with the design criteria of ACI 318 Appendix D and as described in this report.
[2] For the 2006 IBC, d_o becomes d_a.

FIGURE 1: UCAN TZ Wedge Anchor

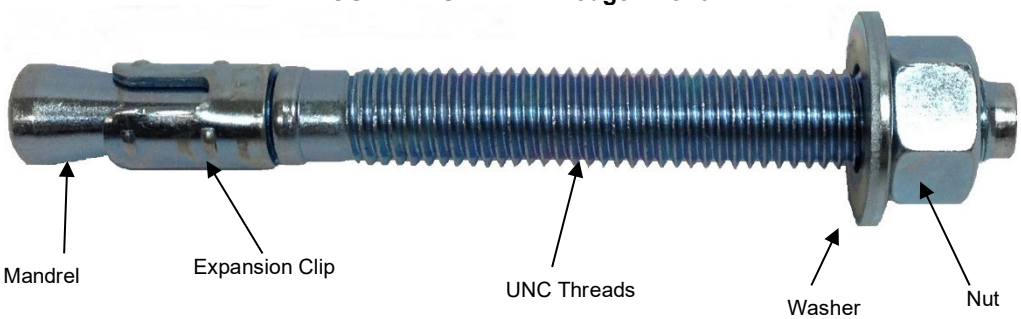

FIGURE 2: UCAN TZ Wedge Anchor Installation Detail

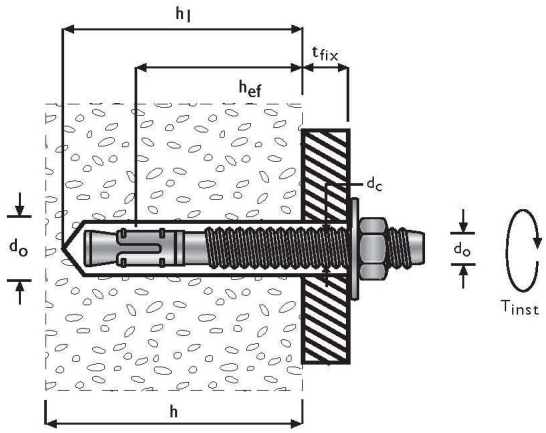

FIGURE 3: UCAN TZ Wedge Anchor Installation Instructions

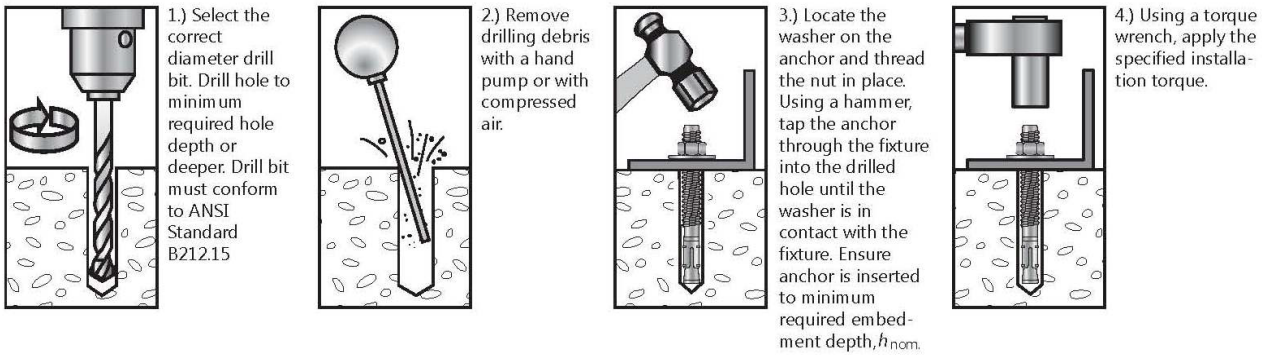

TABLE 2: UCAN TZ Wedge Anchor Tension Design Parameters[1]

Property	Notation	Unit	Nominal Anchor Size						
			3/8 inch	1/2 inch		5/8 inch		3/4 inch	
Anchor category	1, 2 or 3	-	1	1	1	1	1	1	1
Steel Strength in Tension									
Minimum specified yield strength	f_{ya}	ksi	60	60	60	60	60	60	60
		MPa	414	414	414	414	414	414	414
Minimum specified tensile strength	f_{uta}	ksi	75	75	75	75	75	75	75
		MPa	517	517	517	517	517	517	517
Effective tensile stress area	$A_{se,N}$	in^2	0.0775	0.1419	0.1419	0.2260	0.2260	0.3345	0.3345
		mm^2	49.2	90.1	90.1	144	144	212	212
Axial Tension Strength[4,5]	N_{sa}	lb	5,813	10,643	10,643	16,950	16,950	25,088	25,088
		kN	25.86	47.34	47.34	75.40	75.40	111.59	111.59
Reduction factor for Steel Strength[2,4]	ϕ	-	0.65	0.75	0.75	0.75	0.75	0.75	0.75
Concrete Breakout Strength in Tension									
Effective embedment depth	h_{ef}	inch	2	2	3 1/2	2 3/4	4	3 1/4	4 3/4
		mm	51	51	89	70	102	83	121
Effectiveness factor for uncracked concrete	k_{uncr}	-	24	24	24	24	24	27	24
Effectiveness factor for cracked concrete	k_{cr}	-	17	17	17	21	17	21	21
Modification factor for cracked and uncracked concrete	$\psi_{c,N}$	-	1.0	1.0	1.0	1.0	1.0	1.0	1.0
Reduction factor for concrete breakout strength[2,3]	ϕ	-	0.65	0.65	0.65	0.65	0.65	0.65	0.65
Pullout Strength in Tension (Non-Seismic Applications)									
Characteristic pullout strength for uncracked concrete[6,8]	$N_{p,uncr}$	lb	Note 7	Note 7	6,520	Note 7	9,379	Note 7	Note 7
		kN			29.0		41.72		
Characteristic pullout strength for cracked concrete[6,8]	$N_{p,cr}$	lb	2035	Note 7	4,808	Note 7	Note 7	Note 7	Note 7
		kN	9.05		21.39				
Reduction factor for pullout strength[2,3]	ϕ	-	0.65	Note 7	0.65	Note 7	0.65	Note 7	Note 7
Pullout Strength in Tension for Seismic Applications									
Characteristic pullout strength, seismic[8]	$N_{p,eq}$	lb	2,035	Note 7	4808	Note 7	Note 7	Note 7	Note 7
		kN	9.05		21.39				
Reduction factor for pullout strength, seismic[2,3]	ϕ	-	0.65		0.65				

For **SI**: 1 inch = 25.4 mm; 1 ksi = 6.894 MPa; 1 lb = 0.0044 kN

[1] The data in this table shall be used with the design provisions of ACI 318 Appendix D and as described in this report. Tabulated parameters apply to normal weight concrete. For installation in sand-lightweight concrete, additional provisions in Section 4.1.12 of this report apply.

[2] All ϕ factors apply to the load combinations of IBC Section 1605.2.1 or ACI 318 Section 9.2. If the load combinations of ACI 318 Appendix C are used, then the value of ϕ shall be determined in accordance with ACI 318-11 D.4.4 (D.4.5 of ACI 318-08 or ACI 318-05). For reinforcement that satisfies ACI 318 Appendix D requirements for Condition A, refer to ACI 318-11, D4.3 (ACI 318-08 and ACI 318-05, D.4.4) for the appropriate ϕ factor when the load combination of IBC Section 1605.2 or ACI 318 Section 9.2 are used.

[3] For ϕ factors, Condition B as defined in ACI 318-11 D.4.3 and D.4.4; or ACI 318-08 and -05 D.4.4 and D.4.5 applies.

[4] The 3/8 inch TZ Wedge Anchor is considered a brittle steel element and the other sizes are considered ductile steel element as defined by ACI 318 D.1.

[5] The tabulated values for steel strength in tension are based on tests and analysis in accordance with ACI 355.2 and shall be used for design.

[6] Pullout strength value, where tabulated is for installation in normal weight concrete with a compressive strength, f'_c, of 2,500 psi (17.2 MPa), and may be adjusted for higher concrete compressive strength in accordance with Section 4.1.4 of this report.

[7] Pullout strength does not control design of these anchors; pullout strength need not be calculated for the indicated anchors.

[8] For all design cases $\psi_{c,P}$ = 1.0.

TABLE 3: UCAN TZ Wedge Anchor Shear Design Parameters[1]

Property	Notation	Unit	Nominal Anchor Size						
			3/8 inch	1/2 inch		5/8 inch		3/4 inch	
Anchor category	*1, 2 or 3*	-	1	1	1	1	1	1	1
Steel Strength in Shear									
Minimum specified yield strength	f_{ya}	ksi	60	60	60	60	60	60	60
		MPa	414	414	414	414	414	414	414
Minimum specified tensile strength	f_{uta}	ksi	75	75	75	75	75	75	75
		MPa	517	517	517	517	517	517	517
Effective tensile stress area (threads)	$A_{se,V}$	in^2	0.0775	0.1419	0.1419	0.2260	0.2260	0.3345	0.3345
		mm^2	49.2	90.1	90.1	144	144	212	212
Steel strength in shear[4,5]	V_a	lb	1,678	4,199	4,199	5,151	5,151	9,801	9,801
		kN	7.46	18.68	18.68	22.91	22.91	43.60	43.60
Reduction for Steel Strength[2,4]	ϕ	-	0.60	0.65	0.65	0.65	0.65	0.65	0.65
Concrete Breakout Strength in Shear									
Load bearing length of anchor[6]	ℓ_e	inch	2	2	3 1/2	2 3/4	4	3 1/4	4 3/4
		mm	51	51	89	70	102	83	121
Nominal anchor diameter	d_o[8]	inch	0.375	0.500	0.500	0.625	0.625	0.750	0.750
		mm	9.5	12.7	12.7	15.9	15.9	19.1	19.1
Reduction for concrete breakout strength[2,3]	ϕ	-	0.70	0.70	0.70	0.70	0.70	0.70	0.70
Pryout Strength in Shear									
Coefficient for pryout strength[7]	k_{cp}	-	1	1	2	2	2	2	2
Effective embedment depth	h_{ef}	inch	2	2	3 1/2	2 3/4	4	3 1/4	4 3/4
		mm	51	51	89	70	102	83	121
Reduction factor for pryout strength[2,3]	ϕ	-	0.70	0.70	0.70	0.70	0.70	0.70	0.70
Steel Strength in Shear for Seismic Applications									
Steel strength in shear, seismic	$V_{sa,eq}$	lb	1,678	3,564	3,564	4,904	4,904	6,861	6,861
		kN	7.46	15.85	15.85	21.81	21.81	30.52	30.52
Reduction factor for shear, seismic[2,3]	ϕ	-	0.60	0.65	0.65	0.65	0.65	0.65	0.65

For **SI**: 1 inch = 25.4 mm; 1 ksi = 6.894 MPa; 1 lb = 0.0044 kN

[1] The data in this table shall be used with the design provisions of ACI 318 Appendix D and as described in this report. Tabulated parameters apply to normal weight concrete. For installation in sand-lightweight concrete, additional provisions in Section 4.1.12 of this report apply.

[2] All ϕ factors apply to the load combinations of IBC Section 1605.2.1 or ACI 318 Section 9.2. If the load combinations of ACI 318 Appendix C are used, then the value of ϕ shall be determined in accordance with ACI 318-11 D.4.4 (D.4.5 of ACI 318-08 or ACI 318-05). For reinforcement that satisfies ACI 318 Appendix D requirements for Condition A, refer to ACI 318-11, D4.3 (ACI 318-08 and ACI 318-05, D.4.4) for the appropriate ϕ factor when the load combination of IBC Section 1605.2 or ACI 318 Section 9.2 are used.

[3] For ϕ factors, Condition B as defined in ACI 318-11 D.4.3 and D.4.4; or ACI 318-08 and -05 D.4.4 and D.4.5 applies.

[4] The 3/8 inch diameter TZ Wedge Anchor is considered a brittle steel element and the other sizes are considered ductile steel element as defined by ACI 318 D.1.

[5] The tabulated values for steel strength in tension are based on tests and analysis in accordance with ACI 355.2 and shall be used for design.

[6] Load bearing area is the lesser of h_{ef} or $8d_o$.

[7] The Coefficient for pryout strength, k_{cp}, shall comply with ACI 318 D.6.3.1.

[8] For the 2006 IBC, d_o becomes d_a.

TABLE 4: UCAN TZ Wedge Anchor Mean Axial Stiffness, β, in Normal Weight Concrete[1,2]

Concrete Type	Units	Nominal Anchor Diameter						
		3/8 inch	1/2 inch	1/2 inch	5/8 inch	5/8 inch	3/4 inch	3/4 inch
Effective Embedment	inch	2	2	3 1/2	2 3/4	4	3 1/4	4 3/4
	mm	51	51	89	70	102	83	121
Uncracked Concrete	10^3 lb/inch	580	476	246	1,334	2,296	1,023	412
	kN/mm	102	83	43	234	402	179	72
Cracked Concrete	10^3 lb/inch	63	66	35	267	59	171	76
	kN/mm	11	12	6	47	10	30	13

For **SI**: 1 inch = 25.4 mm; 1 ksi = 6.894 MPa; 1 lb = 0.0044 kN

[1]The data in this table is based on test results in accordance with ACI 355.2.

[2]Actual stiffness can vary substantially based on a variety of parameters including concrete strength, geometry of installation and use, and loading.

TABLE 5: UCAN TZ Wedge Anchor Sizes[1]

tem Number	Nominal Diameter	Anchor Length[2]	Head (Length) Mark
WED383	3/8	3	D
WED38334	3/8	3 ¾	E
WED385	3/8	5	H
WED12234	1/2	2 ¾	C
WED12334	1/2	3 ¾	E
WED12412	1/2	4 ½	F
WED12512	1/2	5 ½	I
WED127	1/2	7	L
WED12812	1/2	8 ½	O
WED1210	1/2	10	R
WED58412	5/8	4 ½	G
WED585	5/8	5	H
WED586	5/8	6	J
WED587	5/8	7	L
WED58812	5/8	8 ½	O
WED5810	5/8	10	R
WED34512	3/4	5 ½	I
WED34614	3/4	6 ¼	J
WED347	3/4	7	L
WED34812	3/4	8 ½	O
WED3410	3/4	10	R
WED34512	3/4	12	T

[1] Typical Head Marking is shown in Figure 4 of this report.
[2] The listed anchor lengths are based on anchor sizes commercially available that will satisfy the embedment requirements taken together with the size of the nut and washer, and taking the possible fixture thickness into ac

FIGURE 4: Typical Head Marking

TABLE 6: UCAN TZ Wedge Anchor Example Allowable Stress Design[1,2,3,4,5,6,7,8]

Nominal Anchor Diameter	Nominal Embedment	Effective Embedment	Allowable Tension Load (lb)
3/8 inch	2 3/8	2	894
1/2 inch	2 3/4	2	1,491
1/2 inch	3 3/4	3 1/2	4,314
5/8 inch	3 3/8	2 3/4	3,004
5/8 inch	4 5/8	4	5,270
3/4 inch	4	3 1/4	3,860
3/4 inch	5 5/8	4 3/4	6,820

For **SI**: 1 inch = 25.4 mm; 1 lb = 0.0044 kN
[1] Single anchor in tension only.
[2] Concrete determined to be uncracked for the design life of the anchor.
[3] Load combinations taken from ACI 318 Section 9.2 with no seismic loading.
[4] Design for 30% dead load and 70% live load.
[5] Concrete compressive strength, f'_c, is 2,500 psi.
[6] $c_{a,1} = c_{a,2} > c_{ac}$; $h > h_{min}$
[7] Design for Condition B where no supplementary reinforcement in accordance with ACI 318 D.4.4 is not provided.
[8] Calculation of weighted average for conversion factor α = 1.2(0.3) + 1.6(0.7) = 1.48.

FIGURE 5: Example Strength Design Calculation with ASD Conversion

Given: Single nominal 1/2 inch UCAN TZ Wedge Anchor, with nominal 3 3/4 inch embedment (h_{ef} = 3 1/2 inch) Normal weight concrete, f'_c = 2,500 psi $C_{a1} = C_{a2} > C_{ac}$ Concrete determined to be uncracked for the life of the anchor		
Calculation in Accordance with ACI 318-11 Appendix D and this report:	ACI 318-11 Ref.	Report Ref.
Step 1: Calculate steel strength of a single anchor in tension N_{sa} = 10,643 lb ϕ = 0.75 ϕN_{sa} = (0.75)(10,643 lb) = 7,982 lb	D.5.1.2	Table 2
Step 2: Calculate concrete breakout strength of a single anchor in tension $N_b = k_c \lambda_a \sqrt{f'_c} h_{ef}^{1.5} (30)(1.0)\sqrt{2500}\left(3\frac{1}{2}\right)^{1.5} = 9{,}821\ lb$ $A_{Nc0} = A_{Nc} = 9h_{ef}^2 = 9(3\ 1/2)^2 = 110.25\ in^2$ $\psi_{ed,N} = \psi_{c,N} = \psi_{cp,N} = 1.0$ $\phi = 0.65$ $\phi N_{cb} = \phi \frac{A_{Nc}}{A_{Nc0}} \psi_{ed,N} \psi_{c,N} \psi_{cp,N} N_b = (0.65)\left(\frac{110.25}{110.25}\right)(1.0)(1.0)(1.0)(9{,}821) = 6{,}384\ \text{lb}$	D.5.2.1	Table 2
Step 3: Calculate pullout strength of a single anchor in tension Note that Table 2 indicates pullout strength does not govern	D.5.3.2	Table 2
Step 4: Determine the controlling factored resistance in tension $\phi N_n = \min[\phi N_{sa}, \phi N_{cb}, \phi N_{pn}] = \phi N_{sa}$ = 6,384 lb	D.4.1.1	-
Step 5: Calculate allowable stress design conversion factor for loading condition Controlling load combination: 1.2D + 1.6L α = 1.2(30%)+1.6(70%) = 1.48	9.2	-
Step 6: Convert the strength design value to an allowable stress design value $T_{allowable,ASD} = \frac{\phi N_n}{\alpha} = \frac{6{,}384}{1.48} = 4{,}314\ lb$	-	Section 4.2