GRIPPLE, INC.
1611 Emily Lane
Aurora, IL 60502
(901) 417-3048
www.gripple.com

PIPE, DUCT, AND CONDUIT SUPPORTS AND SUSPENSION HANGERS

CSI Sections:

22 05 29 – Hangers and Supports for Plumbing Piping and Equipment
23 05 29 – Hangers and Supports for HVAC Piping and Equipment

1.0 RECOGNITION

Gripple pipe hangers and supports recognized in this listing report have been evaluated for use as support systems for ducts, pipes, and conduits. The structural performance and physical characteristics properties of the hangers and pipe supports comply with the intent of the provisions of the following standards and regulations:

- MSS SP-58-2018
- ICC-ES PMG LISTING CRITERIA LC1041
- MFMA-4
- SMACNA Duct Construction Standard 4th edition
- Reference Testing Standards: ASTM A370, ASTM D790, and AISI S919-17 - Section 9 `

2.0 LIMITATIONS

Use of the Gripple pipe, duct, and conduit supports, and suspension hangers recognized in this listing report is subject to the following limitations:

2.1 The Pipe duct and conduit supports, and suspension hangers shall be installed in accordance with the manufacturer's published installation instructions, and this listing report. Where there is a conflict, the most restrictive requirements shall govern.

2.2 The pipe hangers and supports recognized in this report are produced by Gripple, Inc. in Aurora, Illinois, Sheffield, UK and Santa Fe Springs, CA**.**

3.0 PRODUCT USE

3.1 Design: The Gripple pipe and conduit supports, clamps, and hangers are used as hangers for vertical load ratings as indicated in the respective Tables 1, 2, 3, and 4 of this report under the product description.

3.2 Installation: Installation of the Gripple pipe support and hanger system shall be in accordance with the applicable published manufacturer's published installation instruction and this report. A copy of this listing report shall be available on the job site for quality control purposes during construction.

4.0 PRODUCT DESCRIPTION

4.1 Gripple Hangers: Gripple hangers includes a galvanized steel wire rope complying with ASTM A1023/1023M or EN12385 or other approved equivalent, an adjustable wire rope locking device and an end fixing that may be used to attach the hanger to the applicable support structure.

Details of the Gripple hangers with individual safe working loads are provided in Table 1 of this report. Safe Working Loads are based on a Safety Factor of 5:1.

TABLE 1 - Gripple Cable Hangers

Hanger Type	Description	Safe Working Load (lbs)
HF2	Hangfast #2	100
HF3	Hangfast #3	200
HF4	Hangfast #4	495
XP2	Express Hanger #2	100
UG2	UniGrip #2	120
UG3	UniGrip #3	240
UG4	UniGrip #4	550
UG6	UniGrip #6	800
DT2	Duct Trapeze #2	100
BT2	Butterfly Trapeze #2	100

For hanging wire rope suspended at an angle, the angle between the rope and vertical position shall not exceed 60 degrees. The safe working load capacity of the overall suspension shall be reduced as shown in Table 2 of this report. Safe working loads are based on a Safety Factor of 5:1.

TABLE 2 - Gripple Hanger Safe Working Load at an Angle

Hanger Type	Safe Working Load at an angle from vertical (lbs.)				
Angle	0º	15º	30º	45º	60º
HF2 / XP2	100	96	86	70	50
HF3	200	192	172	140	100
HF4	495	475	425	346	247

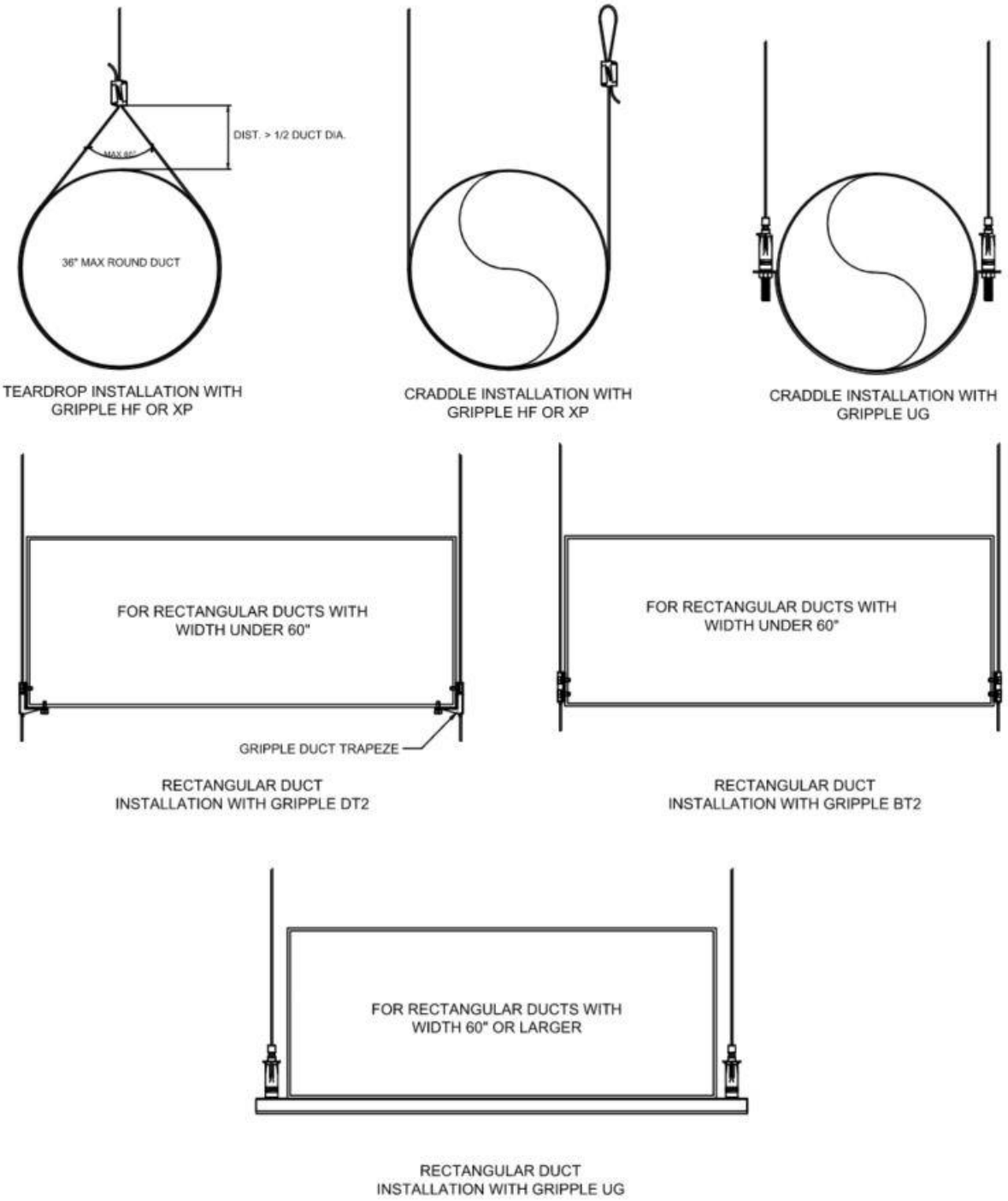

Note:
Gripple products shown in the detail are typical examples and other Gripple products listed in this report may be used for similar installations following the manufacturer's installation instructions.

FIGURE 1—TYPICAL DUCT INSTALLATION DETAILS PER SMACNA DCS CH. 5 FIGURE 5-5

Notes:

1. **Details shown are compliant with ANSI/MSS SP-58 and UL2239. Dimensions and connections to structure vary based on site conditions. Refer to Tables 1 and 2 for the safe working loads and limitations of use.**
2. **Gripple products shown in the detail are typical examples and other Gripple products listed in this report may be used for similar installations following the manufacturer's installation instructions.**

FIGURE 2—TYPICAL PIPE AND CONDUIT INSTALLATION DETAILS

4.2 Gripple Universal Bracket (UB): Universal Bracket is identical in dimension, lengths, and material to the FTB, and may be used with other types of vertical members such as Gripple's cables or conventional threaded rods as hangers, attached to the underside of the floor or roof through the anchorage. The minimum threaded rod size shall be $^{3}/_{8}$ inch (9.5 mm). See Figure 4 and Table 4 of this listing report for available bracket lengths. Figure 5 illustrates the cross-section dimensions and additional section properties. Information on the load ratings for Universal Bracket is provided in Tables 7 and 9 of this listing report.

4.3 Fast Track Bracket and Track System (FTB): The pre-fabricated bracket and hanger system includes a galvanized mild steel bracket supported on mild steel hanger tracks. The bracket is adjustable and slides vertically along the track and may be locked on the desired elevation through an integrated locking mechanism. Details of the products and their variations are given in Table 4 and Table 5 along with an illustration of the product components in Figures 3, 6, and 7 of this listing report. The cross-sectional dimensions of the bracket are the same as UB, which are given in Figure 5 of this listing report. Safe working loads for the Fast Trak Bracket and Track system are provided in Tables 6 and 8 of this listing report. Safe working loads are based on a safety factor of 3:1.

4.4 Gripple Clamp System: Gripple clamp system includes five different types of clamps that may be mounted on Gripple Fast Trak or Universal brackets. These clamps are listed in Table 3 of this listing report along with their maximum single-point loads. Loads are based on a safety factor of 3:1.

TABLE 3 - Gripple Clamp System

Product Code	Description	Maximum Single Point Load (lbs.)
GC2-T	Twist Pipe Clamp	Above mount:1000
GC2-C	Compact Pipe Clamp	Above mount:1000
GC2-3/8	Universal Pipe Clamp	Above mount:1000
GCS-24-30BL	GCS Clamp with 24-inch long strap	Above mount: 850 Below mount: 170
GCS-30-30BL	GCS Clamp with 30-inch long strap	Above mount: 850 Below mount: 170

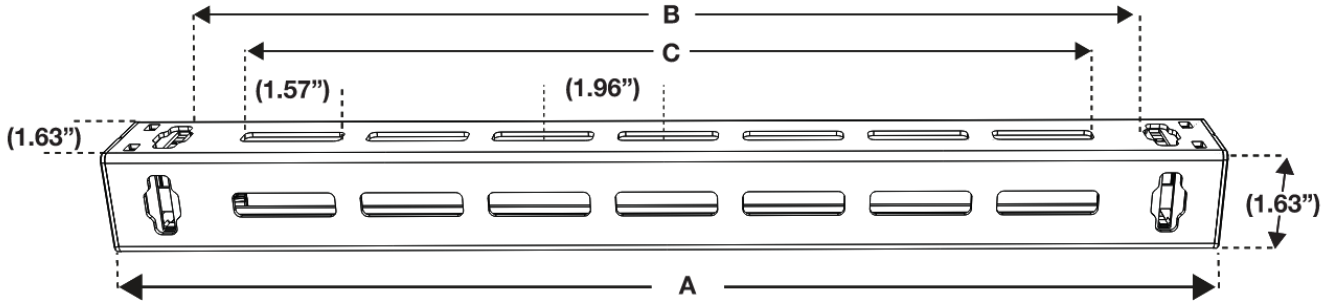

FIGURE 3—FAST TRAK BRACKET

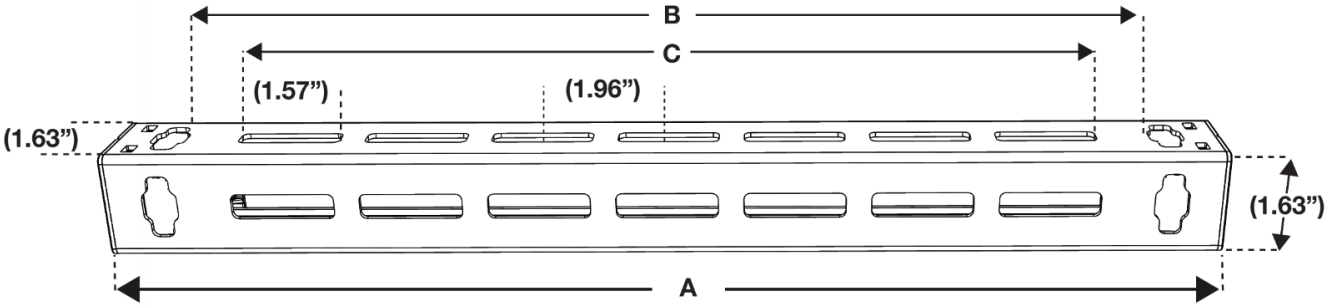

FIGURE 4—UNIVERSAL BRACKET

TABLE 4 – FAST TRAK / UNIVERSAL BRACKET DIMENSIONS

FTB	A (in) Length	UB	A (in) Length	B (in) Suspension Space	C (in) Working Space	Number of slots
FTB-9IN	9.4	**UB-9IN**	9.25	6.9	5.5	3
FTB-13IN	13.3	**UB-13IN**	13.19	10.9	9.4	5
FTB-17IN	17.3	**UB-17IN**	17.13	14.8	13.4	7
FTB-21IN	21.2	**UB-21IN**	21.06	18.7	17.3	9
FTB-25IN	25.2	**UB-25IN**	25.00	22.7	21.3	11
FTB-29IN	29.1	**UB-29IN**	28.94	26.6	25.2	13
FTB-33IN	33	**UB-33IN**	32.87	30.6	29.1	15
FTB-37IN	37	**UB-37IN**	36.81	34.5	33.1	17
FTB-41IN	40.9	**UB-41IN**	40.75	38.4	37	19
FTB-45IN	44.8	**UB-45IN**	44.69	42.4	40.9	21
FTB-49IN	48.8	**UB-49IN**	48.62	46.3	44.9	23
FTB-53IN	52.7	**UB-53IN**	52.56	50.2	48.8	25
FTB-58IN	56.7	**UB-58IN**	56.50	54.2	52.8	27
FTB-61IN	60.6	**UB-61IN**	60.43	58.1	56.7	29

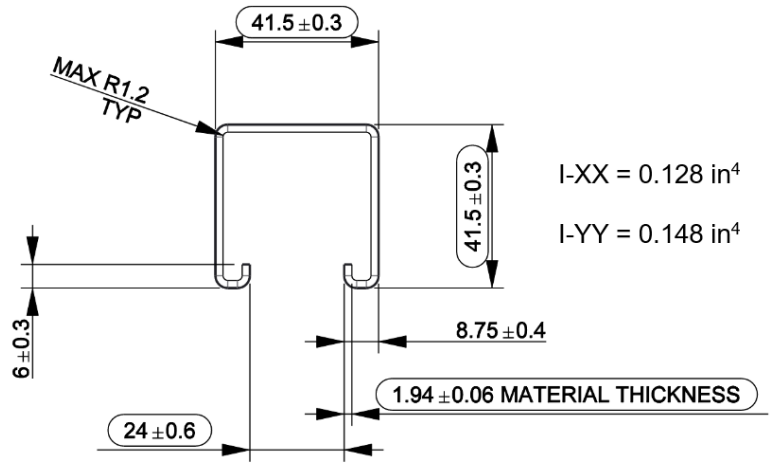

FIGURE 5—FAST TRAK / UNIVERSAL BRACKET CROSS-SECTION

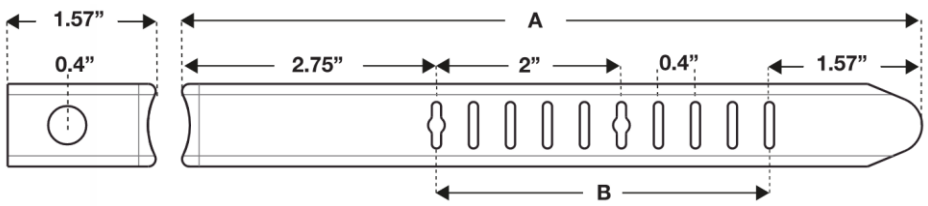

FIGURE 6—FAST TRAK TRACK

TABLE 5—FAST TRAK TRACK DIMENSIONS

Bracket	A (in)	B (in)
FTT-8IN	7.9	3.5
FTT-12IN	11.8	7.5
FTT-16IN	15.7	11.4
FTT-20IN	19.7	15.4
FTT-24IN	23.6	19.3
FTT-28IN	27.6	23.2
FTT-31IN	31.5	27.2
FTT-35IN	35.4	31.1
FTT-39IN	39.4	35
FTT-43IN	43.3	39
FTT-47IN	47.2	42.9
FTT-51IN	51.2	46.9
FTT-55IN	55.1	50.8
FTT-59IN	59.1	54.7

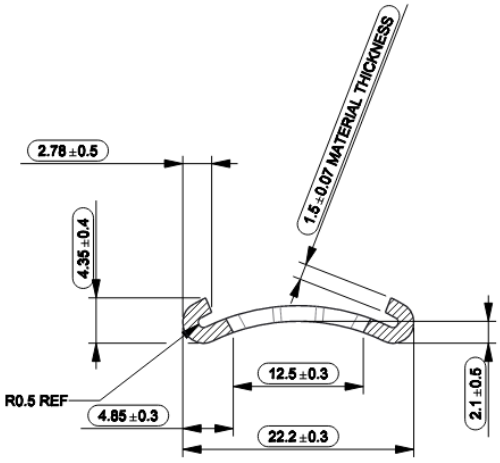

FIGURE 7—FAST TRAK TRACK CROSS-SECTION

TABLE 6 - ALLOWABLE STATIC LOADS FOR FAST TRAK ALONG MAJOR AXIS[1]

Model	Span L (inches)	Point Load at Mid Span (lbf)				Total Load[3] (lbf)			
		Maximum Load[2]	Based on Deflection			Maximum Load[2]	Based on Deflection		
			L/240	L/200	L/120		L/240	L/200	L/120
FTB-9IN	9	650	650	650	650	650	650	650	650
FTB-13IN	13	617	615	617	617		633	641	
FTB-17IN	17	585	580	585	585		617	633	
FTB-21IN	21	553	546	553	553		601	624	
FTB-25IN	25	520	511	520	520		585	616	
FTB-29IN	29	488	476	488	488		569	608	
FTB-33IN	33	456	442	456	456		553	599	
FTB-37IN	37	423	407	423	423		536	591	
FTB-41IN	41	391	373	391	391		520	582	
FTB-45IN	45	359	338	359	359		504	574	
FTB-49IN	49	326	303	326	326		488	566	
FTB-53IN	53	294	269	294	294		472	557	
FTB-58IN	58	262	234	262	262		456	549	
FTB-61IN	61	230	200	230	230		440	541	

For **SI**: 1 inch = 25.4 mm; 1 lbf = 4.45 N.

1. See Figure 8 for load orientation
2. Maximum load is based on a Safety Factor = 3.0
3. Total load is derived by a uniform load multiplied by the span

TABLE 7 - ALLOWABLE STATIC LOADS FOR UNIVERSAL BRACKET ALONG MAJOR AXIS[1]

Model	Span L (inches)	Point Load at Mid Span (lbf)				Uniform Load Multiplied by Span (lbf)			
		Maximum Load[2]	Based on Deflection			Maximum Load[2]	Based on Deflection		
			L/240	L/200	L/120		L/240	L/200	L/120
UB-9IN	9	830	830	830	830	996	996	996	996
UB -13IN	13	783	781	783	783	986	952	960	986
UB -17IN	17	737	733	737	737	978	909	925	978
UB -21IN	21	692	684	692	692	970	866	890	970
UB -25IN	25	645	636	645	645	962	824	855	962
UB -29IN	29	599	587	599	599	954	781	820	954
UB -33IN	33	554	539	554	554	946	738	785	946
UB -37IN	37	507	490	507	507	938	696	750	938
UB -41IN	41	461	442	461	461	930	653	715	930
UB -45IN	45	415	393	415	415	922	610	680	922
UB -49IN	49	369	345	369	369	914	568	645	914
UB -53IN	53	323	296	323	323	906	525	610	906
UB -58IN	58	277	248	277	277	898	482	575	898
UB -61IN	61	230	200	230	230	890	440	540	890

For **SI**: 1 inch = 25.4 mm; 1 lbf = 4.45 N.

1. See Figure 8 for load orientation
2. Maximum load is based on a F.S. = 3.0

TABLE 8 - ALLOWABLE STATIC LOADS FOR FAST TRAK ALONG MINOR AXIS[1]

Model	Span L (inches)	Point Load at Mid Span (lbf)				Uniform Load Multiplied by Span (lbf)			
		Maximum Load[2]	Based on Deflection			Maximum Load[2]	Based on Deflection		
			L/240	L/200	L/120		L/240	L/200	L/120
FTB-9IN	9	200	200	200	200	190	190	190	190
FTB-13IN	13	195	192	194	195		188		
FTB-17IN	17	190	184	189	190		185		
FTB-21IN	21	186	176	184	186		183		
FTB-25IN	25	181	169	179	181		181		
FTB-29IN	29	177	161	173	177		178		
FTB-33IN	33	172	153	168	172		176		
FTB-37IN	37	168	146	163	168		174		
FTB-41IN	41	163	138	158	163		172		
FTB-45IN	45	159	130	152	159		169		
FTB-49IN	49	154	123	147	154		167		
FTB-53IN	53	150	115	142	150		165		
FTB-58IN	58	145	107	137	145		162		
FTB-61IN	61	140	100	130	140		160		

For **SI**: 1 inch = 25.4 mm; 1 lbf = 4.45 N.

1. See Figure 8 for load orientation
2. Maximum load is based on a Safety Factor = 3.0

TABLE 9 - ALLOWABLE STATIC LOADS FOR UNIVERSAL BRACKET ALONG MINOR AXIS[1]

Model	Span L (inches)	Point Load at Mid Span (lbf)				Uniform Load Multiplied by Span (lbf)			
		Maximum Load[2]	Based on Deflection			Maximum Load[2]	Based on Deflection		
			L/240	L/200	L/120		L/240	L/200	L/120
UB-9IN	9	510	260	353	510	354	270	330	354
UB-13IN	13	481	247	333	481	341	261	319	341
UB-17IN	17	453	235	316	453	329	253	308	329
UB-21IN	21	424	223	299	424	316	244	298	316
UB-25IN	25	396	210	282	396	304	236	287	304
UB-29IN	29	368	198	266	368	292	227	277	292
UB-33IN	33	339	186	249	339	279	219	266	279
UB-37IN	37	311	173	232	311	267	210	256	267
UB-41IN	41	282	161	215	282	254	202	245	254
UB-45IN	45	254	149	199	254	242	193	235	242
UB-49IN	49	226	136	182	226	230	185	224	230
UB-53IN	53	197	124	165	197	217	176	214	217
UB-58IN	58	169	112	148	169	205	168	203	205
UB-61IN	61	140	100	130	140	190	160	190	190

For **SI**: 1 inch = 25.4 mm; 1 lbf = 4.45 N.

1. See Figure 8 for load orientation
2. Maximum load is based on a Safety Factor = 3.0

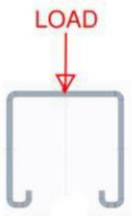

Major Axis Loading

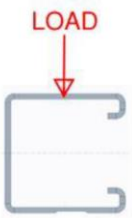

Minor Axis Loading

FIGURE 8 – FAST TRAK AND UNIVERSAL BRACKET ORIENTATION

INSTALLATION STEPS		ILLUSTRATION
1	Mark the location for track installation	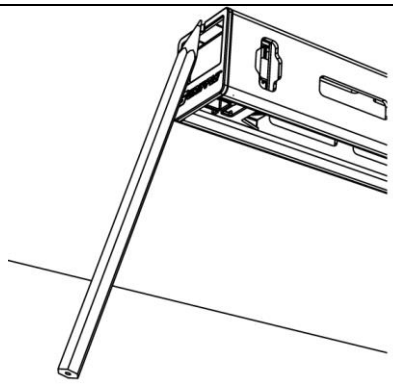
2	Attach the tracks to the structure using appropriate anchors	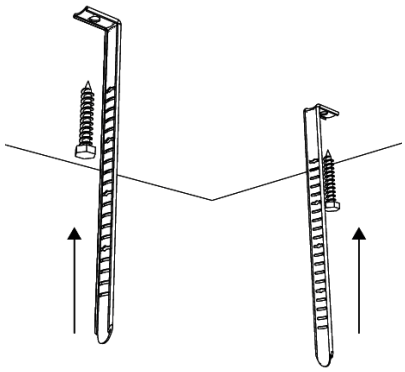
3	- Press the buttons on the sides of the bracket and insert the tracks into the slots on the bracket. - Slide the bracket along the tracks at the desired height. - Leave the button and make sure that the bracket is latched properly with the track by ensuring that the buttons are fully out and aligned with the bracket edges and by pulling the bracket down by hand.	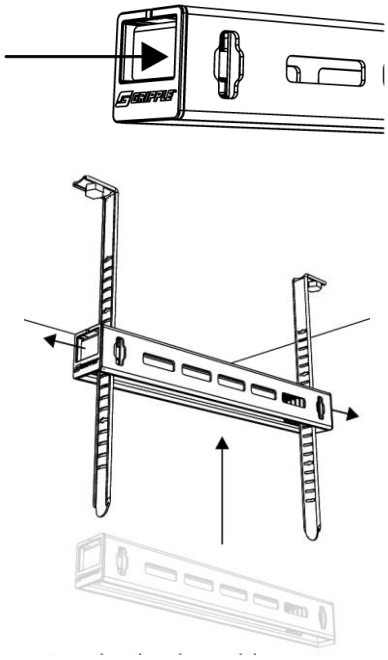

FIGURE 9 – GRIPPLE FAST TRAK INSTALLATION INSTRUCTIONS **(continued on next page)**

4	Bend the excess tracks by hand inside. This step is optional and only for aesthetic purposes. Bending tracks by hand is not recommended when excess is under 4 inches.	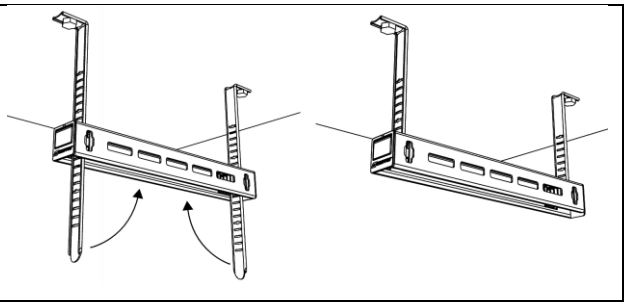

FIGURE 9 (cont'd) – GRIPPLE FAST TRAK INSTALLATION INSTRUCTIONS

INSTALLATION STEPS		ILLUSTRATION
1	For the orientation A and B, installation locate the slots on the end of the Universal Bracket.	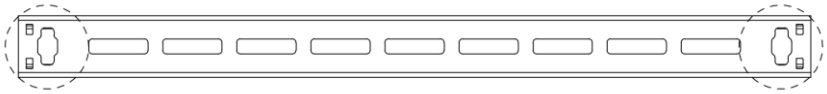
2	**Orientation A & B:** Insert the threaded rods through the slots and attach them to the bracket using two nuts and two washers, as shown in the figure. **Orientation C:** Simply insert the threaded rod into the strut from the open end, thread in the channel nut from the rod end inside the channel, and thread in a nut and washer assembly from one end. Tighten the fasteners until the rod is properly locked.	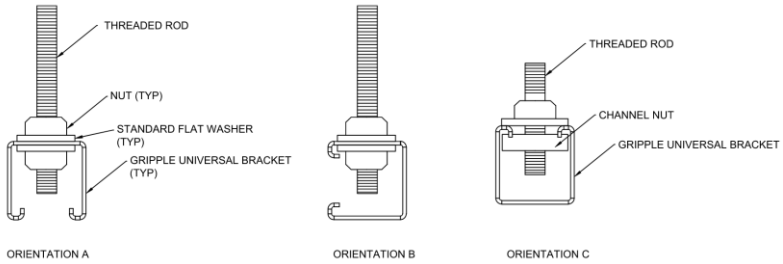
3	Universal Brackets may be also installed with Gripple's cable hanger solutions. Refer to the appropriate Gripple hanger installation instructions provided by Gripple Inc. for the UB installation with Gripple cable hangers.	

FIGURE 10 – GRIPPLE UNIVERSAL BRACKET INSTALLATION INSTRUCTIONS

5.0 IDENTIFICATION

PIPE, DUCT, AND CONDUIT SUPPORTS AND SUSPENSION HANGERS are identified by the GRIPPLE, INC. name and trademark, product name, and listing report number (UEL-5030). The IAPMO Uniform Evaluation Service Mark of Conformity may also be used as shown below:

IAPMO UES UEL-5030

6.0 STATEMENT OF RECOGNITION

This listing report describes the results of research completed by IAPMO Uniform Evaluation Service on Gripple pipe hangers and supports to assess conformance to the standards shown in Section 1.0 of this report and serves as documentation of the product certification. Products are manufactured at locations noted in Section 2.2 of this report under a quality control program with periodic inspection under the supervision of IAPMO UES.

For additional information about this listing report please visit www.uniform-es.org or email us at info@uniform-es.org